WE KNOW-HOW

FLATWORK IRONING SOLUTIONS

GMP Commerciale Srl
Via Sernaglia, 74
31053 Pieve di Soligo TV
ITALY

Ph. +39 0438 82354
info@gmp.it
gmp.it

We know how

There is a decisive difference between a good ironer and an ironing solution perfectly designed on the customer's needs. We have collected expectations and desires to create the ideal solutions for your business today and tomorrow.
That's the reason why GMP today is the European leading specialist manufacturer of flatwork ironers for small/medium laundries, and that's why we proudly introduce you e line and G line.

2 WHO WE ARE

4 OUR SOLUTIONS

6 e line
8 FEATURES
10 OPTIONS
12 TECHNICAL INFORMATION

14 G line
16 FEATURES
21 OPTIONS
22 TECHNICAL INFORMATION

watch the video!

WE KNOW-HOW

Beyond evolution in flatwork ironing

Founded in 1946, GMP started specializing in manufacturing ironers in the early 80s. The long experience and an inexhaustible passion inspire GMP unceasing research.
GMP offers today the widest choice of flatwork ironers in Europe, providing dedicated ironing solutions to meet the worldwide demands of the most various business segments, from commercial to industrial.

We use technology as a language to express the values that characterize GMP since our origin, **reliability and quality as principles of a solid pact with our customers**.

We specialize

We have focussed on a dedicated product for a specific professional sector.
We faced this challenge with determination and the awareness and that to achieve success we have to stand out in the market.

We innovate

GMP constantly monitor field statistics and gather inputs from the market, studying new concepts and testing the most modern materials aiming to increase efficiency.
Several international patents cover innovative solutions, which represent evolution steps for the whole industry.

We make easier

Performance, reliability and sustainability are the pillars of each GMP ironer.
We leave you the pleasure of simplicity in using them.

We here & there

GMP is present worldwide with a capillary distribution network in more than 80 countries.
Our presence and success extended on every continent are the proof that quality is a universal language.

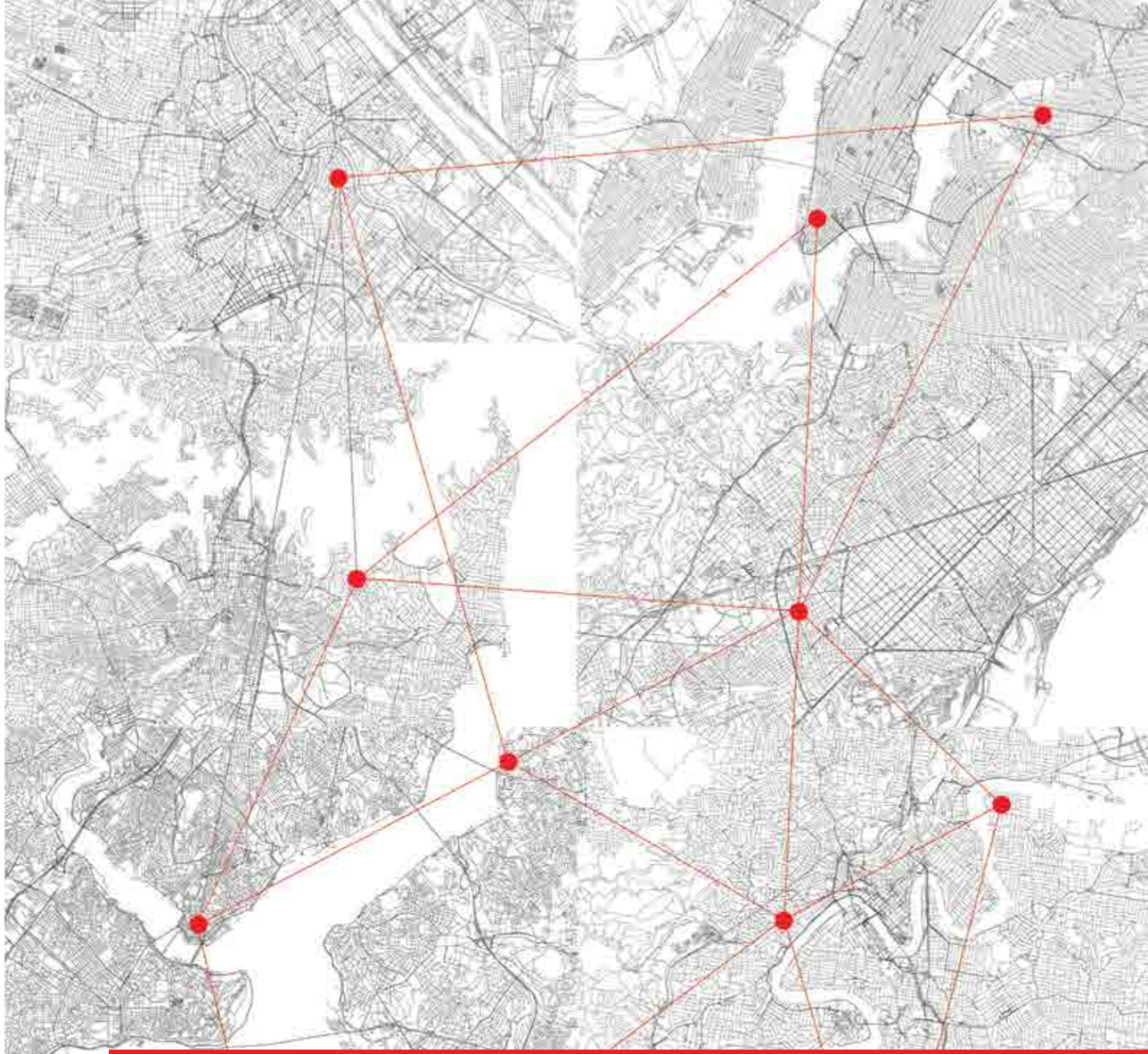

Wherever you are We are close to you

We have organized GMP as a Customer focussed company. We have strongly invested in a professional sales and service team and in efficient tools for quick and comprehensive answers.
Because you are important for us, and serving you is our privilege.

Choosing the right GMP solution

SNOW-WHITE, crisp and clean smelling linen. This is what we all imagine when thinking about perfect ironing. It is all you want when you enter your hotel room after a tiring day, or sit down at the table for an important event. Perfect ironing finish is what we have been pursuing at GMP for two generations, concentrating our efforts in supporting GMP customers with the right advice for their business to grow successfully. Take advantage of GMP know-how; follow our recommendations to identify your ironing solution: the most efficient for your business.

e line

Choose the roller width matching your textiles and configure your E.line with the numerous customizations GMP offer to meet your ironing requirements. 6 chest heated ironers with reliability, ease of use and efficiency in common. Recommended residual humidity: 15-30% according to the model.

- **Requires a pre-drying phase in the dryer**
- Small volumes per day/week or seasonal business
- Lowest possible ownership costs

IDEAL FOR

SMALL RESTAURANTS AND HOTELS

SMALL LAUNDRY BUSINESS
DRYCLEANING SHOPS
SELF-SERVICE LAUNDRIES

KINDERGARTENS, CARE HOMES
OIL RIGS, CAMPS, ARMY, PRISONS

MARINE
FASHION AND TEXTILE INDUSTRY

G line

Looking at improving the ironing process efficiency? With G.line you can choose among 8 different roller sizes and countless variants supporting your business in being efficient, performing and profitable. Robust construction matches performance and safety for the best return on investment. Recommended residual humidity: up to 50%.

- **Irons and dries straight out of a high-spin washer extractor**
- Minimum volume processed: 25 kg/hour
- Speed and efficiency required first

IDEAL FOR

RESTAURANTS, 4* & 5* HOTELS
CATERING ACTIVITIES

SMALL/MEDIUM LAUNDRIES
DRYCLEANING SHOPS
SELF-SERVICE LAUNDRIES

CARE HOMES AND HOSPITALS
OIL RIGS, CAMPS, ARMY, PRISONS

MARINE

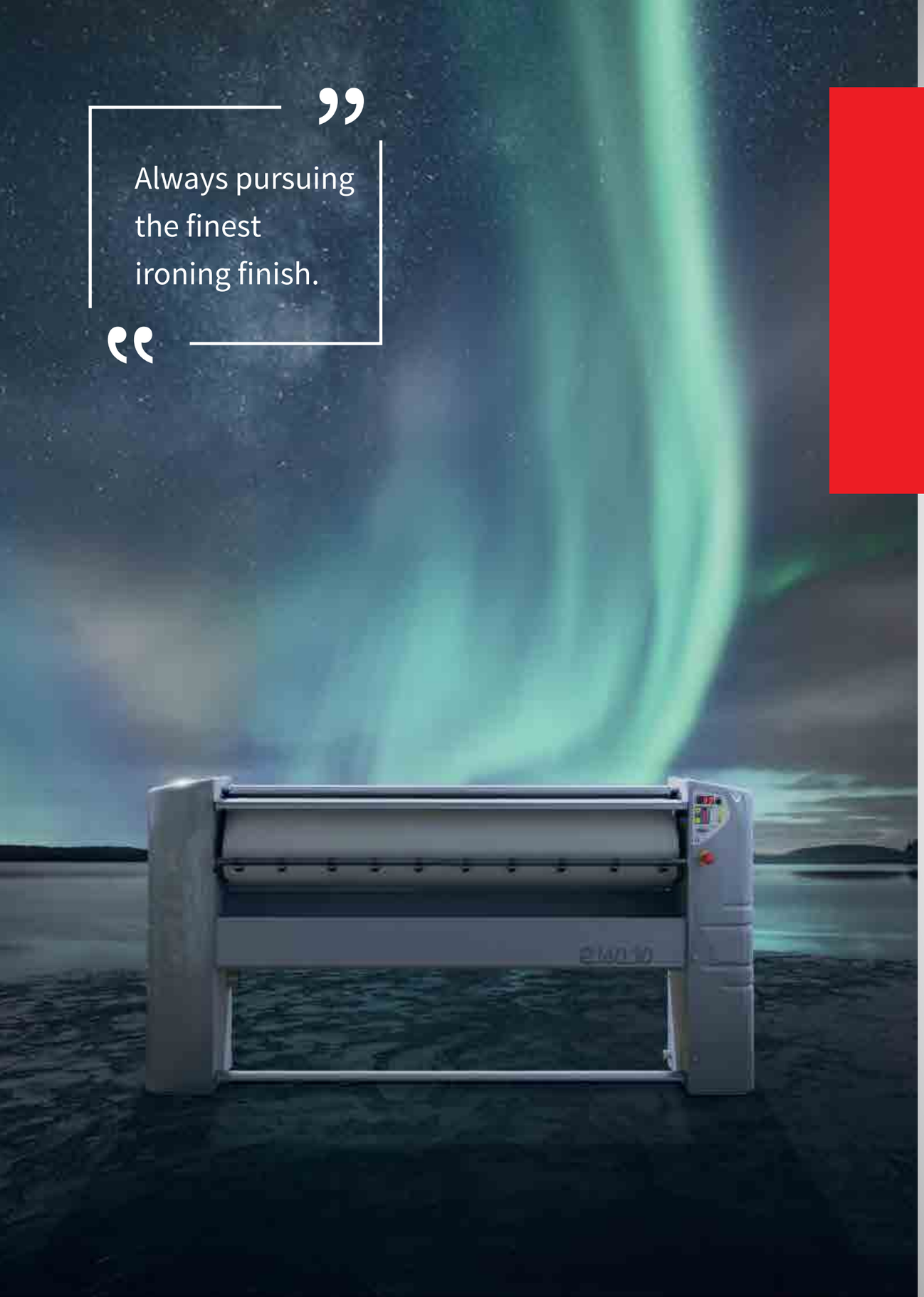

> Always pursuing the finest ironing finish.

e line

Finest ironing finish meets ease of use and reliability.
Create an ironing solution tailored to your business, choosing among 6 different roller sizes.

e 100.25 e 120.25 e 140.25
e 140.30 e 160.30 e 200.30

01 Patented Roll Removing System Fast and Easy Reconditioning

Fully reconditioning your ironer in less than an hour and renovating the original ironing finish is now possible, thanks to the patented "roll removing system".
Original GMP spare roll is assembled in the factory by automatic and specifically designed tool machinery, according to the strictest quality standards, and will ensure perfect ironing results.

02 Steel Chest: Steady Performance

Contrarily to aluminium, which cools down very quickly, steel maintains the temperature very stable during ironing and does not require long heating time - just few minutes and your ironer will be ready to work!

03 Hard Chrome Coating For 3 Years Guaranteed Chest Protection

Hard chromed steel has proven to be the best possible choice for ironing: it ensures an excellent resistance to friction and chemical aggression, thus an extreme longevity. And now you are protected for 3 years.

04 Safety First!

Safety comes first on all GMP projects. Emergency stop button, finger guard bar and a silicone heat shield allow the operator to work safely on the ironer.

Unmistakable design for unmatched reliability & safety

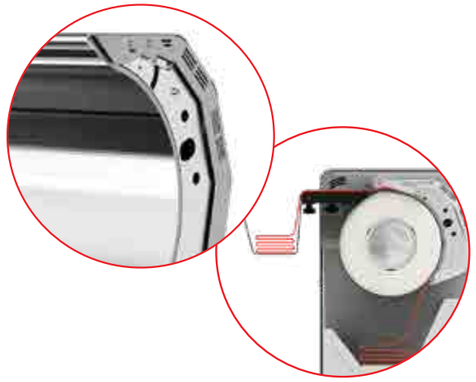

Highlights

- SIMPLE AND ROBUST DESIGN FOR LONG LIFESPAN
- STRONG EPOXY-PAINTED WELDED STRUCTURE
- HIGH-TEMPERATURE RESISTANT META ARAMID ROLLER COVER
- FREQUENCY CONTROLLED VARIABLE IRONING SPEED
- DOUBLE TEMPERATURE SENSORS
- FRONT LINEN FEEDING AND RETURN
- DEDICATED USE AND MAINTENANCE VIDEO TUTORIALS
- SUITABLE FOR MARINE USE
- SPECIFIC SELF-SERVICE SOFTWARE
- IRONER USE DATA LOG

05 Double Temperature Sensors

The most accurate temperature control system, with 2 sensors monitoring the temperature across the whole ironing surface.
GMP exclusive system avoids fluctuation, automatically cutting off the heating when unbalances or limit temperatures are detected.
- Protects your textiles: no scorching.
- Extends roller cover's lifespan.
- No waste of energy.

06 Reducing Utilities Costs

Cut unproductive energy use!
Double-sensor temperature control system, matched with a high-quality insulation of heated parts, reduces heat dispersion and improves its redistribution on the ironing surface.
Sleep mode function automatically activates a stand-by mode if ironer is unused.

07 Aluminium Feeding Table

Feeding your linen has become simpler thanks to the purposely shaped feeding profile. Aluminium surface can be easily cleaned and will grant the hygiene of your laundry.

08 Painted Feeding Basin

Long items to feed?
GMP has realized a specific feeding basin for easy handling of your laundry.

09 Smart Foot Pedal

Stops the roller rotation and leaves your hands free to adjust the linen in the feeding process.

10 User Friendly Control Panel

Large, simple and extremely easy to understand.
Be free to set the ideal ironing speed and temperature for a wide variety of fabrics and humidity grades.

11 Steam Extraction System

Keeps roller padding dry throughout the ironing session, thanks to a dedicated motor extracting moisture generated during the ironing process. Standard for E.30 models.

12 Interchangeable Voltage (E.25)

Voltage can be configured in the field, according to site needs: V.230/1/50-60Hz, V.230/3/50-60Hz, V.400/3N/50-60Hz.

The options creating value

TENAX ROLLER PADDING
Lasting strength

100% stainless steel

No shrinking

Increased ironing pressure

Maintenance free

TENAX is a stainless steel padding that replaces the standard roller padding made of steelwool.
Purposely designed by GMP for its ironers, TENAX lasts for the entire life of the ironer and opposite to the steelwool does not require any maintenance.

- Entirely realized in 100% stainless steel, TENAX is not subject to deformations: its strong structure remains unaltered in time, guaranteeing identical productivity and perfect contact surface along the whole ironer life.
- TENAX definitely eliminates concerns about roller shrinking, wrinkles, insufficient drying and service cost.
- It grants the maximum efficiency of the steam extraction: thanks to its perforated structure, it allows easy and quick removal of humidity from the ironing surface.
- Medium lifespan of the Meta Aramid cover felt: 4000+ hours.

SLEEP MODE
Reducing utilities costs

Long since sensitive to the problematic of energy saving, with first products responding to the criteria introduced since the early '90s, GMP has developed a microprocessor function controlling the ironer use and offering the possibility of activating a sleep mode.
Not only did GMP created the function, but further developed it so that it can be freely configured to best suit each laundry's need:

- AUTOMATIC SWITCH-OFF MODE
  The ironer will automatically and completely switch off after a pre-determined inactivity period.
- READY-TO-START MODE
  After a pre-determined inactivity period, the ironing temperature will automatically drop to a pre-set value, keeping ready to start if intervals between the ironing sessions are short and ironer is required to be ready to start quickly.
  Ideal for launderettes.
- PROGRESSIVE DECREASE MODE
  After a pre-determined inactivity period, the ironing temperature will progressively drop following a pre-set scale.

COIN-OP LAUNDRIES
Our solution

GMP has studied specific solutions for self-service operation. E.line can be easily configured for connection to coin meter or central payment systems with multiple functions.

Customized ABS covers are also available to match the design of your shop.

Technical data

	e100.25	e120.25	e140.25	e140.30	e160.30	e200.30
Roller Dimensions	1000 x Ø250 mm	1200 x Ø250 mm	1400 x Ø250 mm	1400 x Ø300 mm	1600 x Ø300 mm	2000 x Ø300 mm
Standard Supply Tension *Configurable	V.230/1/50-60Hz V.230/3/50-60Hz V.400/3N/50-60Hz	V.230/1/50-60Hz V.230/3/50-60Hz V.400/3N/50-60Hz	V.230/1/50-60Hz V.230/3/50-60Hz V.400/3N/50-60Hz	V.400/3N/50Hz	V.400/3N/50Hz	V.400/3N/50Hz
Heating Power	6 kW	6,9 kW	7,5 kW	9,9 kW	11,4 kW	15 kW
Motor(s)	0,18 kW	0,18 kW	0,18 kW 0,24 kW for .A	1,1 kW	1,1 kW	1,1 kW
Absorption (Amps)	V.230/1: 27A V.230/3: 16A V.400/3: 10,5A	V.230/1: 31A V.230/3: 18A V.400/3: 12A	V.230/1: 34A V.230/3: 20A V.400/3: 13A	V.230/3: 32A V.400/3: 20A	V.230/3: 36,5A V.400/3: 21,5A	V.230/3: 46A V.400/3: 26,5A
Ironing Speed, Variable	1 ÷ 5 m/min	1 ÷ 5 m/min	1 ÷ 5 m/min	1 ÷ 5 m/min	1 ÷ 5 m/min	1 ÷ 5 m/min
Steam Extraction	n/a	n/a	option Ø70 mm, 30 m³/h	standard Ø75 mm, 90 m³/h	standard Ø75 mm, 90 m³/h	standard Ø75 mm, 90 m³/h
Hourly Production (Recommended Moisture)	25 kg (15-20%)	30 kg (15-20%)	35 kg (20-25%)	40 kg (25%)	50 kg (25%)	60 kg (25%)
Ironer Dimensions (wxdxh)	1520x492x1050 mm	1720x492x1050 mm	1920x492x1050 mm	1970x592x1100 mm	2170x592x1100 mm	2570x592x1100 mm
Packing Dimensions, crated (wxdxh)	1690x580x1250 mm	1890x580x1250 mm	2090x580x1250 mm	2140x690x1300 mm	2300x690x1300 mm	2740x730x1400 mm
Weight, Gross/Net	140/104 kg	146/110 kg	189/151 kg	263/219 kg	278/231 kg	306/253 kg

* DIFFERENT VOLTAGES THAN INDICATED AVAILABLE ON OPTION, PLEASE CONTACT OUR SALES OFFICES.

CHARACTERISTICS AND DATA ARE NOT BINDING AND CAN BE SUBJECT TO CHANGE WITHOUT NOTICE.

How to choose the right model?

The right model choice is the first step to improve your laundry's efficiency.
First of all, measure the largest linen you wish to iron: consider that to obtain the best quality finish and speed up the ironing process you should ideally not exceed two layers.

	e100.25	e120.25	e140.25	e140.30	e160.30	e200.30
Recommended Maximum Linen Width	200 cm	240 cm	280 cm	280 cm	320 cm	400 cm

Installation information

e 25

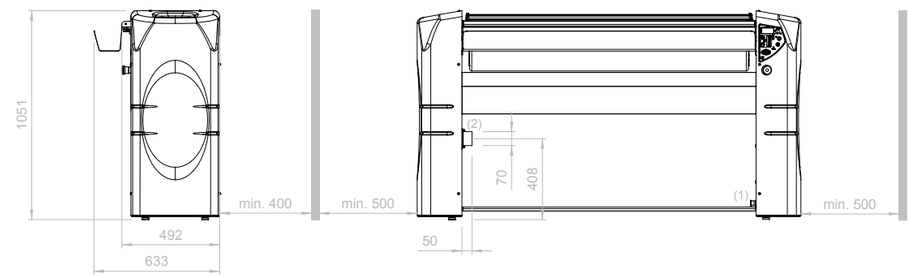

(1) ELECTRICAL CONNECTION (PG13.5)
(2) STEAM EXHAUST Ø70 mm (ONLY FOR ".A VERSIONS")

e 30

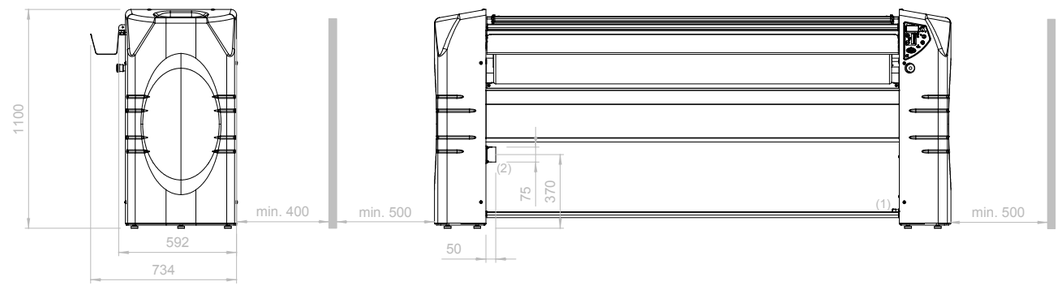

(1) ELECTRICAL CONNECTION (PG21)
(2) STEAM EXHAUST Ø75 mm

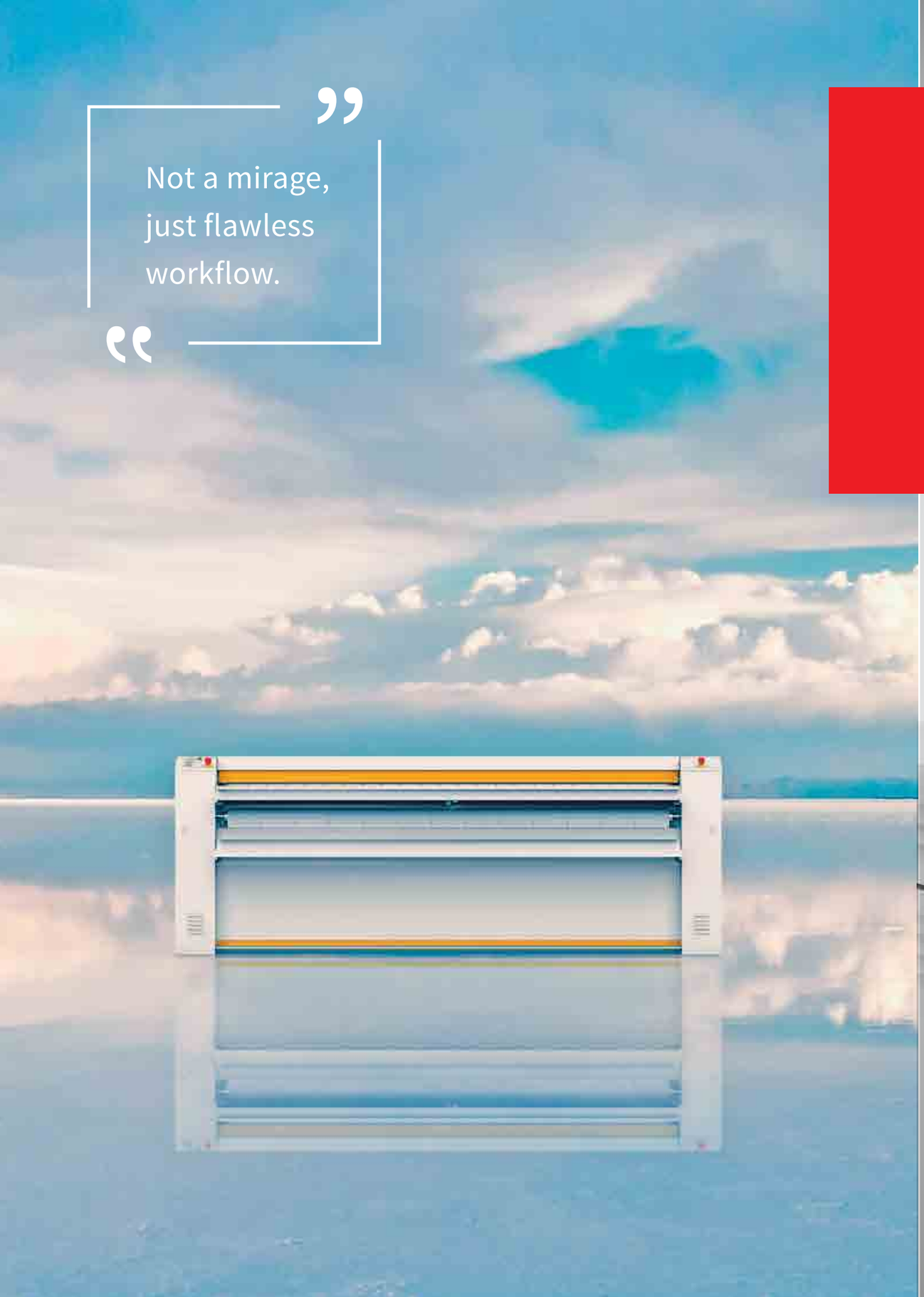

> Not a mirage, just flawless workflow.

G line

Efficiency and performance at their top.
8 roller sizes and countless variants for a non-stop productivity.

G 14.25
G 15.35 G 18.35 G 21.35 G 26.35
G 21.50 G 26.50 G 32.50

Unmatched finish & superior performance

01 Unmatched Finish

G.line delivers an extremely high-quality ironing finish thanks to a specifically developed pressure roller. GMP solution allows treating a wide variety of fabrics: it guarantees at same time the pressure needed to obtain a perfectly smooth result, and a delicate treatment of the sensitive fabrics such as silk, satin and embroidered textiles. Ideal to treat also composite table linen (ex. polyester on one side and cotton on the other). Meta Aramid detaching linen ribbons sewed with Meta Aramid wire leave no marks on the linen, and are extremely resistant to wear and tear.

02 Double Temperature Sensors

The best and most accurate temperature control system available, with 2 sensors monitoring the temperature across the whole ironing surface. GMP exclusive system avoids fluctuation, automatically cutting off the heating when unbalances or limit temperatures are detected by the sensors. Concrete benefits:

- Protects textiles and ironing belts: no scorching.
- Avoids waste of energy.

03 Maintenance-Free Rollers

Instead of padding belts draft rollers with rubber, GMP has opted for installing padding-free rollers. The knurling process on the rollers metal surface replaces the rubber function, granting the grip necessary for a homogeneous belts traction. At same time, GMP solution eliminates ironer downtime due to sudden rubber peeling and with it one of the most frequent maintenance operations on a drying ironer.

04 Strongly Built, Into The Smallest Details

In designing G.line, GMP has privileged a strong construction granting a smooth and trouble free operation over the years.
Oversized components and high quality materials choice characterize this ironers line, which has been developed for efficiency and performance.

05 Mirror Polished Cylinder

GMP uses prime quality seamless cylinders, which are completely processed inside GMP factory for the best quality control over the heart of the ironer. Mirror polishing is carried out with a particular care to obtain a perfectly smooth surface for best ironing results.

Highlights

STRONG AND ROBUST DESIGN FOR LONG LIFESPAN

STRONG EPOXY-PAINTED WELDED STRUCTURE

HIGH-TEMPERATURE RESISTANT META ARAMID IRONING BELTS

FREQUENCY CONTROLLED VARIABLE IRONIG SPEED

DOUBLE TEMPERATURE SENSORS (FROM G18.35 UPWARDS)

AUTOMATIC COOL-DOWN SYSTEM

FRONT LINEN FEEDING AND RETURN

DEDICATED USER VIDEO TUTORIALS

SUITABLE FOR MARINE USE

06 Patented Titanium-Steel Burner

Gas heated models use a very efficient burner, which has been entirely developed by GMP for the specific use on a flatwork ironer (patented solution), offering an extremely precise temperature control. GMP solution is easy to install and service, and extremely reliable.

07 User Friendly Control Panel

Large, simple and extremely easy to understand.
Be free to set the ideal ironing speed and temperature for a wide variety of fabrics and humidity grades.
Smart diagnostics on display.

08 Easy Access to Components

G.line has been designed looking at the maximum ease of access to all the components for ordinary maintenance purpose.

09 Foot pedal

Stops the roller rotation and leave your hands free to adjust the linen in the feeding process.

10 Steam Extraction: Air-Blades (G.25 and G.35)

The "air blades" system grants an extra-efficient steam extraction compared to the traditional pipes with round holes, thanks to wider suction surface. It limits at the same time the volume of lint being able to reach the motors, reducing maintenance operations frequency.

11 Steam Extraction: SKS System (G.50)

A specially designed, extra-wide suction hood efficiently collects the steam flow generated during the ironing process and conveys it into the extraction piping:

- No heat dispersion: because of its special design, the hood will extract only the humidity (steam) without affecting the temperature of the cylinder, eliminating heat dispersions and thus saving on energy costs.
- Shorter drying times: thanks to the extra-wide extraction surface, water will evaporate very quickly from the linen and the belts, allowing working at higher ironing speed.
- Extremely silent.

A complete choice for every business

G line

	G 21.50 G 26.50 G 32.50 High performance (80-145 kg/h)	G 15.35 G 18.35 G 21.35 G 26.35 Medium/high performance (40-70 kg/h)	G 14.25 Medium performance (25 kg/h)
Usable Roller Width	From 210 to 320	From 148 to 258 cm	145 cm
Feeding	Rotating Feeding Belts	Rotating Feeding Belts	Aluminium Table
Temperature Control	2 Sensors + Safety Thermostat	2 Sensors (1 for G15.35) + Safety Thermostat	1 Sensor + Safety Thermostat
Frequency Controlled Variable Ironing Speed	✓	✓	✓
Automatic Cool-Down	✓	✓	✓
Maintenance-Free Belts Draft Roller	✓	✓	✓
Steam Extraction System	SKS - Steam Extraction Hood (GMP Exclusive Solution)	Air Blades	Air Blades
Cylinder Support System	Floating Support System, With 4 Rollers Each Side (GMP Exclusive Solution)	Bars	Bars
Sewed Meta-Aramid Detaching Linen Ribbons	✓	✓	✓
Cylinder Surface	Choose: Polished or Anti-Corrosion Chrome Treatment (Guaranteed 3 years)	Choose: Polished or Anti-Corrosion Chrome Treatment (Guaranteed 3 years)	Choose: Polished or Anti-Corrosion Chrome Treatment (Guaranteed 3 years)
Available Heating Types	Electric, Gas, Indirect Steam	Electric, Gas, Indirect Steam	Electric, Gas

Small business looking for a drying ironer?

G 14.25 is the answer

Outstanding finish,
super performance
& affordable investment.

Extra-wide contact surface for super performance

G14.25 features a 35% wider contact surface between the linen and the roller compared to similar models on the market.
This boosts the productivity up to 25 kg/h, resulting in 20 tons of ironed linen more every year! (250 working days, 8 hours/day shifts).

A true drying ironer

G14.25 irons and dries in one single passage single-layer textiles straight out from the high-spin washer extractor (1000 rpm; 50% residual moisture). Processing time is significantly reduced, bringing further saving on utilities and labour.

Ironing king-size with excellent finish

Although G14.25 "only" features a roller width of 1.45 mt, it can process almost any kind of linen, up to the king size bed sheets. This model grants an excellent finish on any fabric type, including the delicate or difficult to treat ones, such as linen, table cloths with embroideries or made of composite fabrics (like polyester on one side and cotton on the other) as well as duvet covers.

Efficient temperature control, low consumption

Thanks to the extremely precise temperature control achieved, heating power needed for electrically heated version is just below 14 kW, while gas heated version only needs 1,05 kg/h of LPG for the same performances.

A guaranteed quality choice

hygienic surface

3 YEAR WARRANTY

CHROMED CYLINDER

Hygiene and long-term saving
with the wax-free anti-corrosion chrome coating

G line

Linen destined to come in contact with food or human skin should not be contaminated by oxidation products that inevitably form on the surface of a polished cylinder. Opting for a chromed cylinder is almost a must in a modern world. And advantages are numerous:

- MAXIMUM HYGIENE
  Laboratory tests have demonstrated that chromed surfaces are ideal to grant the maximum hygiene, and new researches proved they grant an even better resistance to bacterial growth than stainless steel.

- LESS MAINTENANCE
  Chromed cylinder reduces ordinary maintenance costs: it is no more necessary to apply wax daily or weekly.
  Preventive maintenance costs are completely cut: no waxing is required during seasonal shutdowns of the laundry, no periodical exhaust motors and piping cleaning from wax residuals needed.

- BETTER IRONING QUALITY AND LONGER LASTING
  Ironing quality improves thanks to the smoother cylinder surface guaranteed by the chrome coating.
  Output remains constant over the years, thanks to belts maintaining their transpiration capacity: wax makes them impermeable, indeed.
  Moreover, lifespan of the belts and of the pressure roller covering considerably extends thanks to being submitted to less frictions.

Hard chrome coating is guaranteed 3 years against corrosion and is available for all G.line models.

Technical data & installation information

CHARACTERISTICS AND DATA ARE NOT BINDING AND CAN BE SUBJECT TO CHANGE WITHOUT NOTICE.

		G14.25	G15.35	G18.35	G21.35	G26.35
	Cylinder Dimensions	1450 x Ø270 mm	1480 x Ø325 mm	1800 x Ø325 mm	2100 x Ø325 mm	2580 x Ø325 mm
	Supply Tension * Electric Gas/Steam	V.400/3N/50Hz V.230/1/50Hz	V.400/3N/50Hz V.230/1/50Hz	V.400/3N/50Hz V.230/1/50Hz	V.400/3N/50Hz V.230/1/50Hz	V.400/3N/50Hz V.230/1/50Hz
HEATING SOURCE						
Electric	Heating Power	13,8 kW	20,7 kW	24,3 kW	27 kW	34,2 kW
Gas	Thermal Power	13,6 kW	22 kW	25,6 kW	27 kW	33,5 kW
	Gas Consumption Nat. Gas	1,44 m³/h	2,26 m³/h	2,71 m³/h	2,82 m³/h	3,53 m³/h
	Gas Consumption LPG	1,05 kg/h	1,8 kg/h	2,02 kg/h	2,2 kg/h	2,5 kg/h
Steam	Average Consumption	n/a	19 kg/h	22 kg/h	26 kg/h	32 kg/h
MOTOR(S)						
Electric/Steam		0,27 kW	1 kW	1 kW	1 kW	1 kW
Gas		0,32 kW	1,2 kW	1,2 kW	1,2 kW	1,2 kW
TOTAL ABSORPTION						
	Electric Gas/Steam	V.400/3: 21 A V.230/1: 2,2 A	V.400/3: 31,5 A V.230/1: 5 A	V.400/3: 37 A V.230/1: 5 A	V.400/3: 41 A V.230/1: 5 A	V.400/3: 51 A V.230/1: 5 A
	Ironing Speed, Variable	0,8 ÷ 3 m/min	1,6 ÷ 5 m/min	1,6 ÷ 5 m/min	1,6 ÷ 5 m/min	1,6 ÷ 5 m/min
	Steam Extraction Fumes Extraction	280 m³/h 100 m³/h	280 m³/h 140 m³/h	280 m³/h 140 m³/h	280 m³/h 140 m³/h	280 m³/h 140 m³/h
	Hourly Production (Recommended Moisture 50%)	25 kg	43 kg	50 kg	56 kg	75 kg
	Ironer Dimensions (wxdxh)	2010x510x1080 mm	2010x550x1100 mm	2340x550x1100 mm	2640x550x1100 mm	3140x580x1150 mm
	Packing Dimensions (wxdxh)	2130x690x1300 mm	2140x730x1560 mm	2490x730x1560 mm	2890x730x1560 mm	3290x730x1560 mm
	Weight, Gross/Net	360/310 kg	497/450 kg	540/490 kg	602/548 kg	700/635 kg

* DIFFERENT VOLTAGES THAN INDICATED AVAILABLE ON OPTION, PLEASE CONTACT OUR SALES OFFICES

G14.25

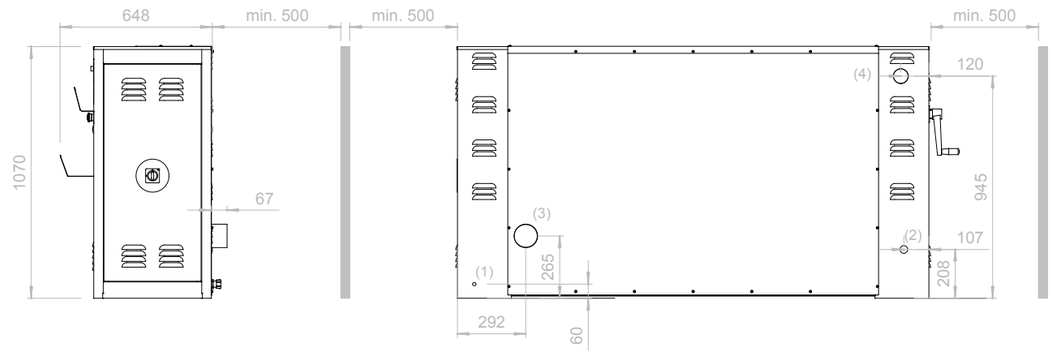

(1) ELECTRICAL CONNECTION (PG21)
(2) GAS CONNECTION (G 1/2" M)
(3) STEAM EXHAUST Ø78 mm
(4) FUMES EXHAUST Ø80 mm (only gas heated models)

G35

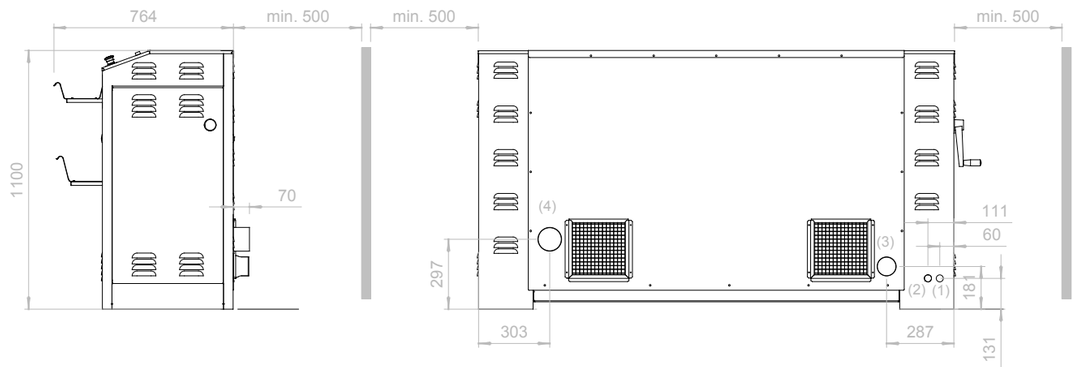

(1) ELECTRICAL CONNECTION (PG21)
(2) GAS CONNECTION (G 1/2" M)
(3) STEAM EXHAUST Ø80 mm
(4) FUMES EXHAUST Ø100 mm (only gas heated models)

G line

		G21.50	G26.50	G32.50
	Cylinder Dimensions	2100 x Ø500 mm	2580 x Ø500 mm	3200 x Ø500 mm
	Supply Tension *	V.400/3N/50Hz	V.400/3N/50Hz	V.400/3N/50Hz
	HEATING SOURCE			
Electric	Heating Power	45 kW	57 kW	66 kW
Gas	Thermal Power	54 kW	67 kW	95,2 kW
	Gas Consumption Nat. Gas	5,7m³/h	7 m³/h	10 m³/h
	Gas Consumption LPG	4,3 kg/h	5,3 kg/h	7,5 kg/h
Steam	Average Consumption	50 kg/h	70 kg/h	90 kg/h
	MOTOR(S)			
Electric/Steam		1,6 kW	1,6 kW	1,6 kW
Gas		2,7 kW	2,7 kW	2,7 kW
	TOTAL ABSORPTION Electric Gas/Steam	 69 A 5 A	 85 A 5 A	 98 A 5 A
	Ironing Speed, Variable	1,6 ÷ 8 m/min	1,6 ÷ 8 m/min	1,6 ÷ 8 m/min
	Steam Extraction Fumes Extraction	740 m³/h 1200 m³/h	740 m³/h 1200 m³/h	740 m³/h 1200 m³/h
	Hourly Production (Recommended Moisture)	75 kg/h el 85 kg/h gas 95 kg/h steam @4bar	95 kg/h el 110 kg/h gas 115 kg/h steam @4bar	120 kg/h el 135 kg/h gas 145 kg/h steam @4bar
	Ironer Dimensions (wxdxh)	2880x750x1290 mm	3280x750x1290 mm	3880x750x1290 mm
	Packing Dimensions (wxdxh)	2990x920x1600 mm	3390x920x1600 mm	4190x920x1600 mm
	Weight, Gross/Net	1288/1200 kg	1413/1320 kg	1800/1700 kg

* DIFFERENT VOLTAGES THAN INDICATED AVAILABLE ON OPTION, PLEASE CONTACT OUR SALES OFFICES

CHARACTERISTICS AND DATA ARE NOT BINDING AND CAN BE SUBJECT TO CHANGE WITHOUT NOTICE.

G50

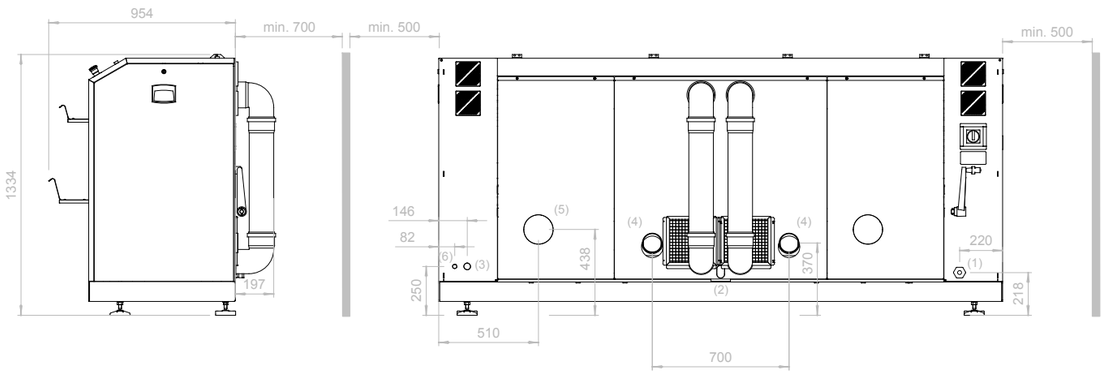

(1) ELECTRICAL CONNECTION
(PG13.5 for gas and steam heated models; PG36 for electric heated models)
(2) GAS CONNECTION (G 1" M)
(3) STEAM CONNECTION (G 1" M)
(4) STEAM EXHAUST Ø100 mm
(5) FUMES EXHAUST Ø120 mm (only gas heated models)
(6) CONDENSATE EXIT G 1/2" M (only steam heated models)