DANUBE

FLATWORK IRONER Ø 325 MM

DII 140
DII 160
DII 200

FEATURES

This range is available in several working widths and 2 types of heating that allows more flexibility and can suit to all types of structures. Its output between 10 and 40 kg/h is a guarantee of satisfaction.

- Front feeding and return of linen.
- Stainless steel panels.
- Electric or gas heating.
- Electronic control with selection of ironing speed and temperature.
- Roll Ø 325 mm in polished steel.
- 3 available working widths: 1m40, 1m60 and 2 m.
- Motor with speed inverter.
- Built-in cool down system.
- Feeding and ironing by Nomex belts for a better quality of ironing and durability.
- Double emergency stops: hands safety bar and front emergency push button.
- Heating protection by 2 thermostats.

OPTIONS

- SMART SYSTEM (patented): automatic regulation of the ironing speed according to residual moisture.
- Chrome plated roll.
- Special voltages.

TECHNICAL DATA	UNIT.	DII-140		DII-160		DII-200	
Theorical production 45% humidity	Kg/h	10-20		20-30		30-40	
Ø Roll	mm	325		325		325	
Working width	mm	1.400		1.600		2.000	
Height floor-feeding belts	mm	990		990		990	
Working speed	mt/min	1-6,5		1-6,5		1-6,5	
POWER							
Heating power (electric model)	kW	12		16,2		21	
Total electric power (electric model)	kW	12,37		16,57		21,49	
Heating power (gas model)	kW	14		22,5		30	
Total electric power (gas model)	kW	0,37		0,37		0,49	
Roll motor power	kW	0,25		0,25		0,25	
Fan motor power	kW	0,12		0,12		0,12 (x2)	
CONNECTIONS		**ELECTRICAL**	**GAS**	**ELECTRICAL**	**GAS**	**ELECTRICAL**	**GAS**
Tension 230V - III + T	Nº x mm2 / A	4 x 6 / 32A	4 x 2,5 / 2A	4 x 10 / 50A	4 x 2,5 / 2A	4 x 16 / 63A	4 x 2,5 / 2A
Tension 400V - III + N + T	Nº x mm2 / A	5 x 4 / 20A	5 x 2,5 / 2A	5 x 4 / 25A	5 x 2,5 / 2A	5 x 6 / 32A	5 x 2,5 / 2A
Ø Gas inlet	BSP	1/2”		1/2”		1/2”	
DIMENSIONS / PACKAGING DIMENSIONS							
Width / Width	mm	1.960 / 2.340		2.210 / 2.340		2.560 / 2.780	
Depth / Depth	mm	644 / 770		644 / 770		644 / 770	
Height / Height	mm	1.107 / 1.400		1.107 / 1.400		1.107 / 1.400	
Weight / Weight	Kg	300 / 335		355 / 375		405 / 428	
Volume	m3	1,40 / 2,52		1,58 / 2,52		1,83 / 3,00	
OTHERS							
No. Fume outlet	Nº	1		1		2	
Ø Fume outlet	mm	98		98		98	
Air flow	m3/h	500		500		1.000	
Sound Level	dB	60		60		63	

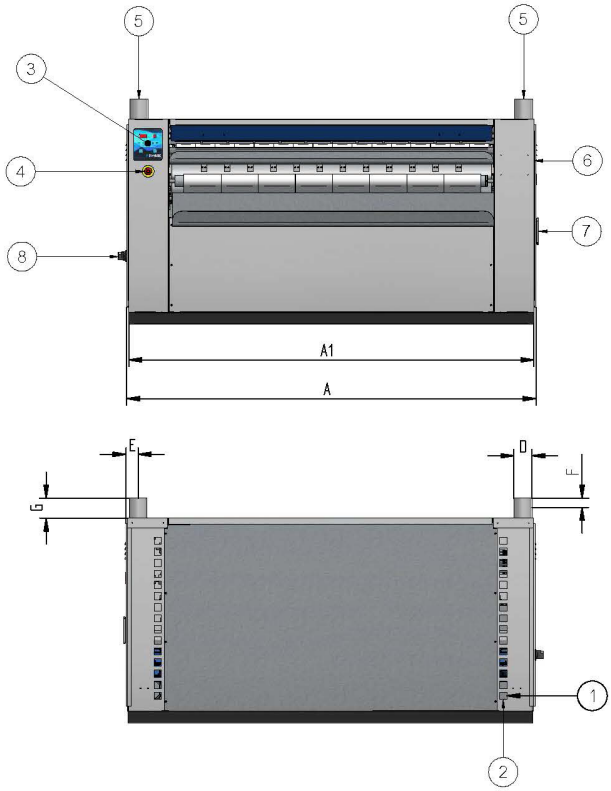

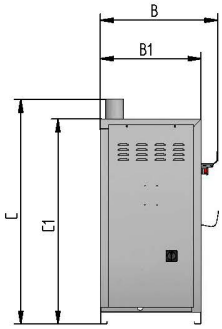

01. Electrical connection
02. Gas inlet
03. Control panel
04. Emergency stop
05. Exhaust
06. Crank contactor
07. Crank
08. Main switch

	A	B	C	A1	B1	C1	D	E	F	G
DII-140	2.030	644	1.247	1.960	546	1.107	Ø 98	66	77	140
DII-160	2.280	644	1.247	2.210	546	1.107	Ø 98	66	77	140
DII-200	2.630	644	1.247	2.560	546	1.107	Ø 98	66	77	140

www.danube-romania.ro
office@danube-romania.ro